Data Sheet

Article number: 2029360250LL2SCR
Description: E+G Linear actuators - GN 293-60-250-LL2-SCR

Measures

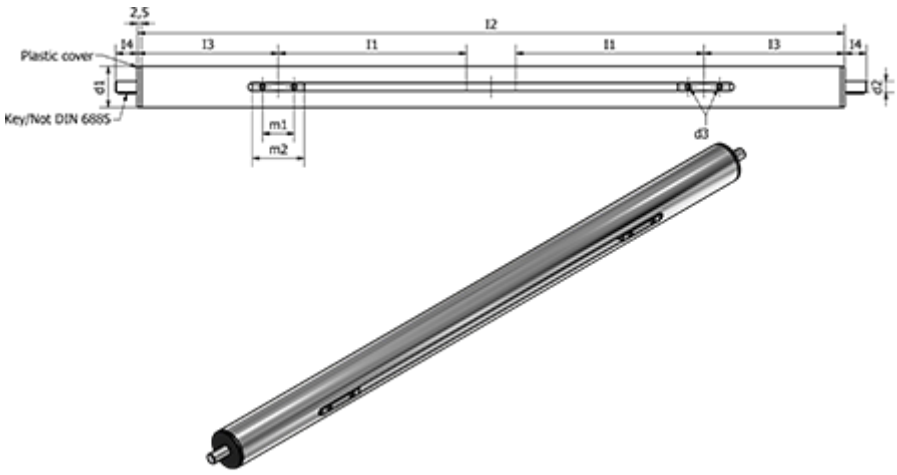

d1	= 60	m2	= 70
d2 f7	= 14	Max. travel	= 715
d3	= M8	Shaft key DIN 6885	= A5x5x16
l1	= 250	Shaft thread	= TR24x5
l2	= 2xl1+375		
l3	= 142.5		
l4	= 19		
m1	= 58		

Product drawings and brochures of any kind may contain errors for which Brd. Klee A/S cannot be liable.